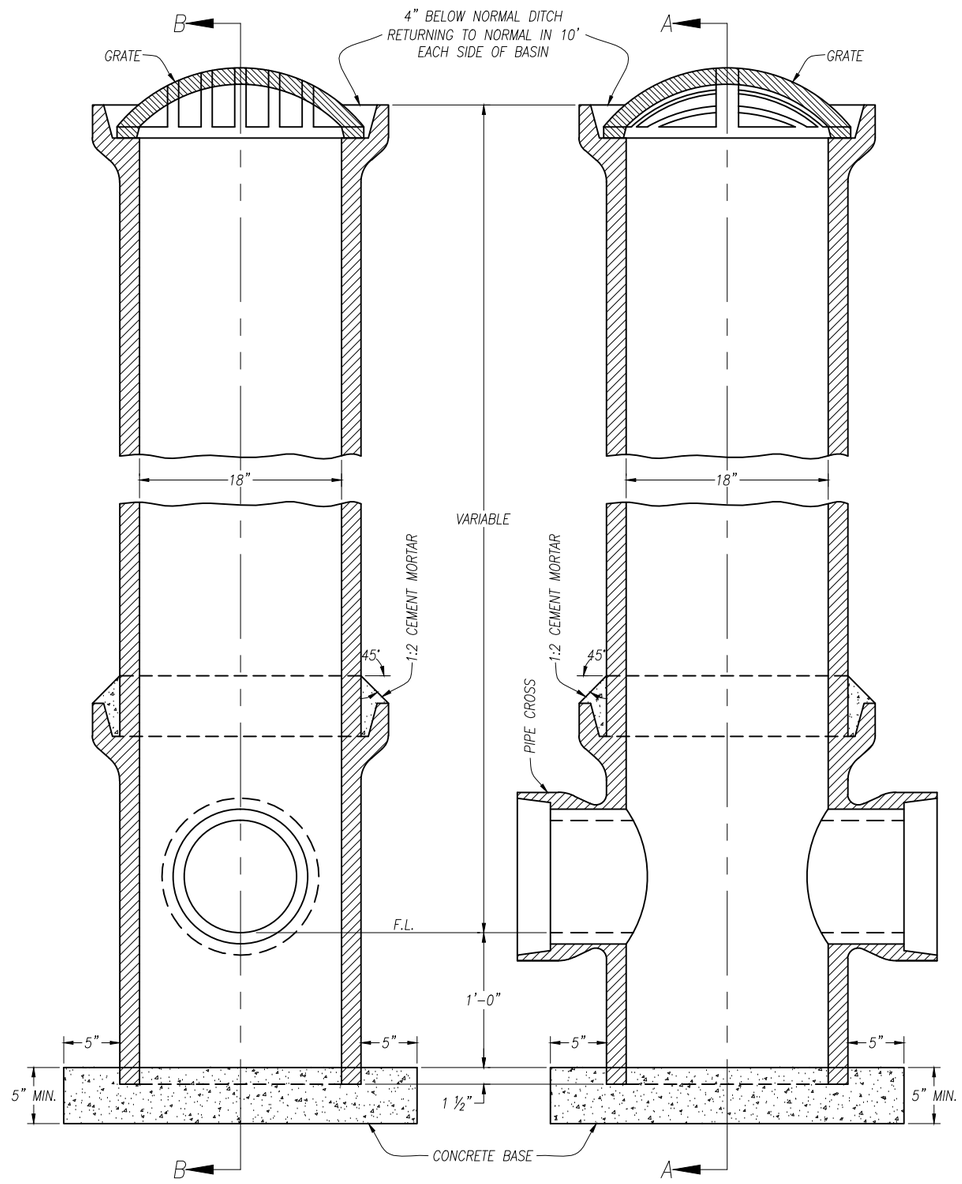

SECTION A-A

SECTION B-B

CATCH BASIN

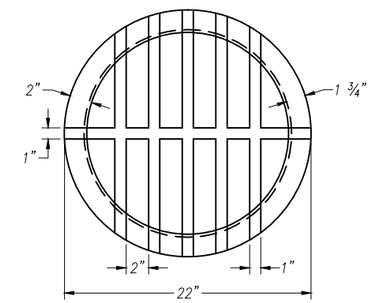

PLAN

ALL GRATE EDGES TO BE ROUNDED TO ¼" RADIUS.

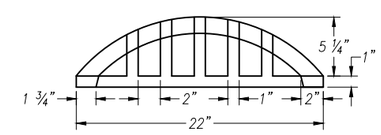

ELEVATION

GRATE

NOTES

GENERAL – CARE SHALL BE TAKEN BY THE FIELD ENGINEER IN THE PLACING OF THIS TYPE OF CATCH BASIN. SPECIAL NOTE SHALL BE GIVEN TO THE GRADE ELEVATION OF DRAIN PIPE AND WHEN FINISHED THE CATCH BASIN SHALL STAND IN A TRUE VERTICAL POSITION. NO CUTTING OF HOLES IN THE SIDE OF THE PIPE WILL BE PERMITTED.

CASTING – SHALL BE NEENAH R-4351-D, EAST JORDAN 6509 OR SHALL MEET THE REQUIREMENTS OF THE COUNTY ENGINEER. THE DESIGN SHALL BE ESSENTIALLY THE SAME AND EQUALLY AS STRONG AS THE ONE SHOWN HEREON.

WEIGHT = 70 lbs. MINIMUM

RISER PIPE – IN ALL CASES SHALL BE 18 INCHES IN DIAMETER REGARDLESS OF SIZE OF CARRYING LINE.

CROSS – WHERE CARRYING LINE IS NOT CONTINUOUS THROUGH THE CATCH BASIN, THE UPSTREAM OPENING OF THE CROSS SHALL BE PROPERLY PLUGGED USING VITRIFIED OR CONCRETE STOPPER AND SEALED JOINT.

RISER AND CROSS – SHALL BE CONSTRUCTED OF STANDARD STRENGTH VITRIFIED CLAY PIPE OR STANDARD STRENGTH NON-REINFORCED CONRETE PIPE, BELL AND SPIGOT PIPE ONLY.

CONCRETE BASE – TO BE CLASS "C".

CATCH BASIN SPACING – CATCH BASIN SPACING SHALL BE 500 FEET MAXIMUM OR AS REQUIRED TO MEET DRAINAGE REQUIREMENTS OR OTHER REGULATORY REQUIREMENTS.

REVISIONS		
NO.	DATE	BY
1	11-13-89	TJP
2	10-5-06	RJM
3	5-12-16	ZJG

ALLEN COUNTY, OHIO
COUNTY ENGINEER

CATCH BASIN DETAILS

STANDARD CONSTRUCTION DRAWING CB-3

DRAWN BY: Z.J.G | APPROVED BY: B. E. RHODES